Deutsches Institut für Bautechnik DIBt

Member of EOTA
www.eota.eu

**Approval body for construction products and types of construction**

**Bautechnisches Prüfamt**

An institution established by the Federal and Laender Governments

Designated according to Article 29 of Regulation (EU) No 305/2011 and member of EOTA (European Organisation for Technical Assessment)

# European Technical Assessment

# ETA-10/0257 of 23 November 2021

English translation prepared by DIBt - Original version in German language

**General Part**

| | |
|---|---|
| Technical Assessment Body issuing the European Technical Assessment: | Deutsches Institut für Bautechnik |
| Trade name of the construction product | SIKLA Drop-in Anchor AN / AN ES |
| Product family to which the construction product belongs | Mechanical fastener for use in concrete |
| Manufacturer | Sikla Holding GmbH<br>Kornstraße 4<br>4614 MARCHTRENK<br>ÖSTERREICH |
| Manufacturing plant | Sikla Herstellwerk 1 |
| This European Technical Assessment contains | 16 pages including 3 annexes which form an integral part of this assessment |
| This European Technical Assessment is issued in accordance with Regulation (EU) No 305/2011, on the basis of | EAD 330232-01-0601, Edition 05/2021 |
| This version replaces | ETA-10/0257 issued on 2 February 2016 |

**Deutsches Institut für Bautechnik**
Kolonnenstraße 30 B | 10829 Berlin | GERMANY | Phone: +49 30 78730-0 | Fax: +49 30 78730-320 | Email: dibt@dibt.de | www.dibt.de

The European Technical Assessment is issued by the Technical Assessment Body in its official language. Translations of this European Technical Assessment in other languages shall fully correspond to the original issued document and shall be identified as such.

Communication of this European Technical Assessment, including transmission by electronic means, shall be in full. However, partial reproduction may only be made with the written consent of the issuing Technical Assessment Body. Any partial reproduction shall be identified as such.

This European Technical Assessment may be withdrawn by the issuing Technical Assessment Body, in particular pursuant to information by the Commission in accordance with Article 25(3) of Regulation (EU) No 305/2011.

## Specific Part

### 1 Technical description of the product

The SIKLA Drop-in Anchor AN / AN ES is a fastener made of galvanized steel, stainless steel or high corrosion resistant steel which is placed into a drilled hole and anchored by deformation-controlled expansion.
The product description is given in Annex A.

### 2 Specification of the intended use in accordance with the applicable European Assessment Document

The performances given in Section 3 are only valid if the anchor is used in compliance with the specifications and conditions given in Annex B.

The verifications and assessment methods on which this European Technical Assessment is based lead to the assumption of a working life of the anchor of at least 50 years. The indications given on the working life cannot be interpreted as a guarantee given by the producer, but are to be regarded only as a means for choosing the right products in relation to the expected economically reasonable working life of the works.

### 3 Performance of the product and references to the methods used for its assessment

#### 3.1 Mechanical resistance and stability (BWR 1)

| Essential characteristic | Performance |
|---|---|
| Characteristic resistance to tension load (static and quasi-static loading) Method A | See Annex B2, C1 to C2 |
| Characteristic resistance to shear load (static and quasi-static loading) | See Annex C3 to C4 |
| Displacements | See Annex C5 |
| Characteristic resistance and displacements for seismic performance category C1 and C2 | No performance assessed |

#### 3.2 Safety in case of fire (BWR 2)

| Essential characteristic | Performance |
|---|---|
| Reaction to fire | Class A1 |
| Resistance to fire | No performance assessed |

#### 3.3 Aspects of durability linked with the Basic Works Requirements

| Essential characteristic | Performance |
|---|---|
| Durability | See Annex B1 |

## 4 Assessment and verification of constancy of performance (AVCP) system applied, with reference to its legal base

In accordance with the European Assessment Document EAD 330232-01-0601 the applicable European legal act is: [96/582/EC].

The system to be applied is: 1

## 5 Technical details necessary for the implementation of the AVCP system, as provided for in the applicable EAD

Technical details necessary for the implementation of the AVCP system are laid down in the control plan deposited with Deutsches Institut für Bautechnik.

Issued in Berlin on 23 November 2021 by Deutsches Institut für Bautechnik

Dipl.-Ing. Beatrix Wittstock
Head of Section

*beglaubigt:*
Baderschneider

## SIKLA Drop-in Anchor AN / AN ES

| Anchor sizes and variations | | | |
|---|---|---|---|
| **Drop-in Anchor AN** (without shoulder) | | **Drop-in Anchor AN / ES** (with shoulder) | |
| AN M6x30 |  | AN ES M6x30 |  |
| AN M8x30<br>AN M8x40 |  | AN ES M8x30<br>AN ES M8x40 |  |
| AN M10x40<br>AN M12x50<br>AN M12x80<br>AN M16x65<br>AN M16x80<br>AN M20x80 |  | AN ES M10x30<br>(zinc plated) |  |
| | | AN ES M10x40<br>AN ES M12x50<br>AN ES M12x80<br>AN ES M16x65<br>AN ES M16x80 |  |

## Installation situation

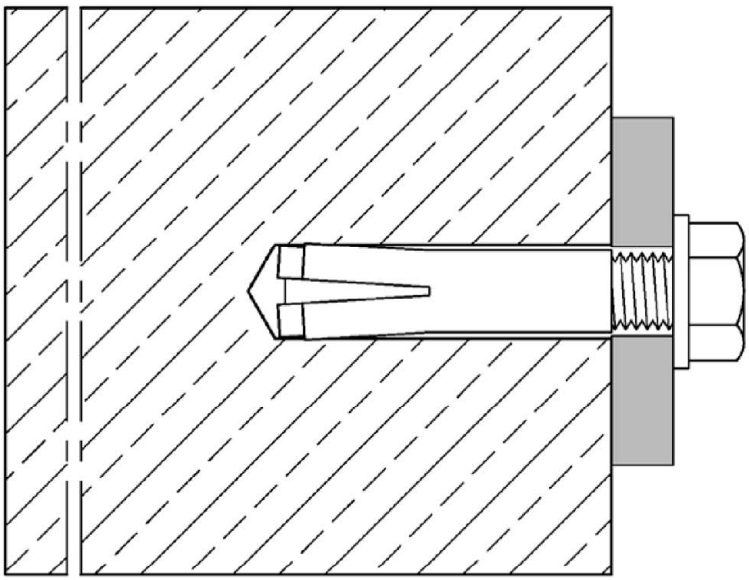

**SIKLA Drop-in Anchor AN / AN ES**

**Product description**
Anchor sizes and variations / Installation situation

**Annex A1**

## Table A1: Material

| Part | Designation | Steel, zinc plated | Stainless steel A4 | High corrosion resistant steel HCR |
|---|---|---|---|---|
| 1 | Anchor sleeve | Cold formed or machining steel, galvanized, EN ISO 4042:2018 | Stainless steel (e.g. 1.4401, 1.4404, 1.4571) EN 10088:2014, EN ISO 3506:2020 | Stainless steel, 1.4529, 1.4565, EN 10088:2014, EN ISO 3506:2020 |
| 2 | Cone | Cold formed or machining steel | Stainless steel (e.g. 1.4401, 1.4404, 1.4571) EN 10088:2014 | |

## Requirements on the fastening screw or the threaded rod and nut according to the engineering documents:

- Minimum screw-in depth $L_{sdmin}$ see Table B1
- The length of screw or the threaded rod shall be determined depending on the thickness of fixture $t_{fix}$, available thread length $L_{th}$ (= maximum screw-in depth) and the minimum screw-in depth $L_{sdmin}$.
- $A_5$ > 8 % Ductility
- Materials
  - **Steel, zinc plated,** property class 4.6 / 4.8 / 5.6 / 5.8 or 8.8 according to EN ISO 898-1:2013 or EN ISO 898-2:2012
  - **Stainless steel A4** or **high corrosion resistant steel HCR,** property class 70 or 80 according to EN ISO 3506:2020

**SIKLA Drop-in Anchor AN / AN ES**

**Product description**
Materials / Requirements

**Annex A2**

## Anchor sleeve

**Anchor version without shoulder (AN)**

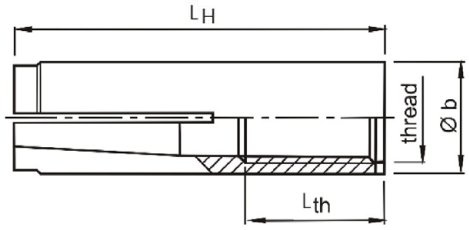


**Anchor version with shoulder (AN ES)**

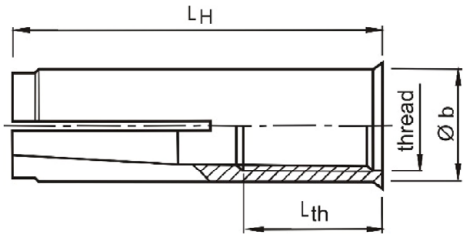


**Marking**: see Table A2

e.g.: ◇ E M8x40

| | |
|---|---|
| ◇ | identifying mark of manufacturing plant |
| E | anchor identity (version without shoulder) |
| ES | anchor identity (version with shoulder) |
| M8 | size of thread |
| 40 | anchorage depth |

additional marking

| | |
|---|---|
| A4 | stainless steel |
| HCR | high corrosion resistant steel |

**Cone**

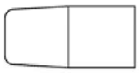

M6x30 and M10x30

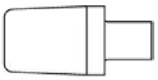

remaining sizes

### Table A2: Dimensions and marking

| Anchor size | Anchor sleeve | | | | Marking | | | Cone |
|---|---|---|---|---|---|---|---|---|
| | thread | Ø b | $L_H$ | $L_{th}$ | Version AN (without sleeve) | Version AN ES (with sleeve) | alternative | |
| M6x30 | M6 | 8 | 30 | 13 | ◇ E M6x30 | ◇ ES M6x30 | ◇ E M6 |  |
| M8x30 | M8 | 10 | 30 | 13 | ◇ E M8x30 | ◇ ES M8x30 | ◇ E M8 |  |
| M8x40 | M8 | 10 | 40 | 20 | ◇ E M8x40 | ◇ ES M8x40 | ◇ E M8x40 | |
| M10x30 | M10 | 12 | 30 | 12 | - | ◇ ES M10x30 | ◇ E M10x30 |  |
| M10x40 | M10 | 12 | 40 | 15 | ◇ E M10x40 | ◇ ES M10x40 | ◇ E M10 |  |
| M12x50 | M12 | 15 | 50 | 18 | ◇ E M12x50 | ◇ ES M12x50 | ◇ E M12 | |
| M12x80 | M12 | 15 | 80 | 45 | ◇ E M12x80 | ◇ ES M12x80 | ◇ E M12x80 | |
| M16x65 | M16 | 19,7 | 65 | 23 | ◇ E M16x65 | ◇ ES M16x65 | ◇ E M16 | |
| M16x80 | M16 | 19,7 | 80 | 38 | ◇ E M16x80 | ◇ ES M16x80 | ◇ E M16x80 | |
| M20x80 | M20 | 24,7 | 80 | 34 | ◇ E M20x80 | - | ◇ E M20 | |

Dimensions in mm

**SIKLA Drop-in Anchor AN / AN ES**

**Product description**
Dimensions and marking

**Annex A3**

## Setting tool for marking

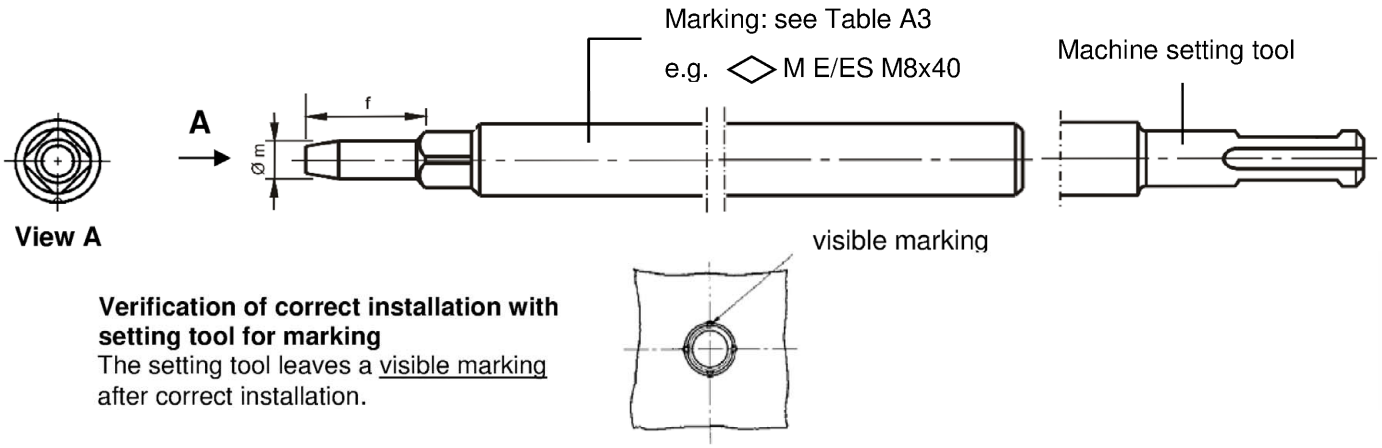


**Verification of correct installation with setting tool for marking**
The setting tool leaves a visible marking after correct installation.



## Setting tool

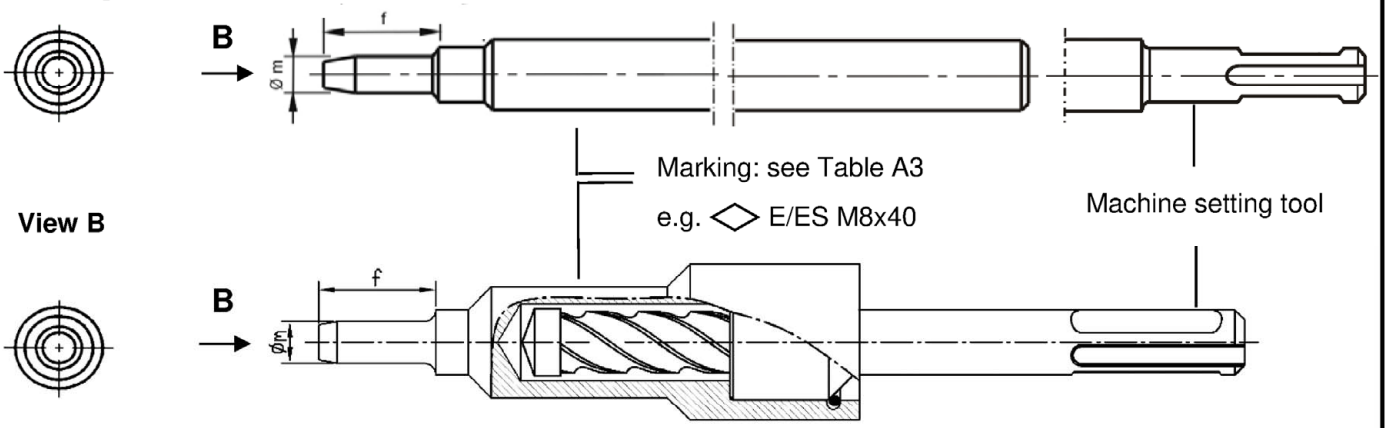


## Table A3: Dimensions and marking of setting tools

| Anchor size | Ø m | f | Setting tool for marking | | Setting tool | |
|---|---|---|---|---|---|---|
| | | | **Marking** | alternative | **Marking** | alternative |
| M6x30 | 4,9 | 17 | ◇ M E/ES M6x30 | ◇ M E M6 | ◇ E/ES M6x30 | ◇ E M6 |
| M8x30 | 6,4 | 18 | ◇ M E/ES M8x30 | ◇ M E M8 | ◇ E/ES M8x30 | ◇ E M8 |
| M8x40 | 6,4 | 28 | ◇ M E/ES M8x40 | ◇ M E M8x40 | ◇ E/ES M8x40 | ◇ E M8x40 |
| M10x30 | 8,0 | 18 | ◇ M ES M10x30 | ◇ M E M10x30 | ◇ ES M10x30 | ◇ E M10x30 |
| M10x40 | 8,0 | 24 | ◇ M E/ES M10x40 | ◇ M E M10 | ◇ E/ES M10x40 | ◇ E M10 |
| M12x50 | 10,0 | 30 | ◇ M E/ES M12x50 | ◇ M E M12 | ◇ E/ES M12x50 | ◇ E M12 |
| M12x80 | 10,0 | 60 | ◇ M E/ES M12x80 | ◇ M E M12x80 | ◇ E/ES M12x80 | ◇ E M12x80 |
| M16x65 | 13,5 | 36 | ◇ M E/ES M16x65 | ◇ M E M16 | ◇ E/ES M16x65 | ◇ E M16 |
| M16x80 | 13,5 | 51 | ◇ M E/ES M16x80 | ◇ M E M16x80 | ◇ E/ES M16x80 | ◇ E M16x80 |
| M20x80 | 16,5 | 50 | ◇ M E M20x80 | ◇ M E M20 | ◇ E M20x80 | ◇ E M20 |

Dimensions in mm

**SIKLA Drop-in Anchor AN / AN ES**

**Product description**
Setting tools / Dimensions and marking

**Annex A4**

## Specifications of intended use

**Anchorages subject to:**

- Static and quasi-static loads

**Base materials:**

- Compacted, reinforced or unreinforced normal weight concrete, without fibres according to EN 206:2013 + A1:2016
- Uncracked concrete
- Strength classes C20/25 to C50/60 according to EN 206:2013 + A1:2016

**Use conditions (Environmental conditions):**

- Structures subject to dry internal conditions (all materials)
- For all other conditions applies:
  Use according to EN 1993-1-4:2015 corresponding to corrosion resistance class CRC according to Annex A2, Table A1:
  - Stainless steel A4: CRC III
  - High corrosion resistant steel HCR: CRC V
- Anchor types M6x30 A4 and M8x30 A4 only for dry internal exposure

**Design:**

- Anchorages are designed under the responsibility of an engineer experienced in anchorages and concrete work.
- Verifiable calculation notes and drawings are prepared taking account of the loads to be anchored. The position of the anchor is indicated on the design drawings (e.g. position of the anchor relative to reinforcement or to supports, etc.).
- The strength class and the length of the fastening screw or threaded rod shall be defined by the designing engineer
- Design of fastenings according EN 1992-4:2018 (and TR 055, Edition February 2018, if necessary)
- Anchor sizes M6x30, M8x30 and M10x30 for statically indeterminate structural components only, when in case of failure, the load can be distributed to other fasteners.

**Installation:**

- Anchor installation in accordance with the manufacturer's specifications and drawings and using the appropriate tools
- Drill hole by hammer drilling or vacuum drilling

| **SIKLA Drop-in Anchor AN / AN ES** | **Annex B1** |
|---|---|
| **Intended use**<br>Specifications | |

## Table B1: Installation parameters

| Anchor size | | | M6x30 | M8x30 | M8x40 | M10x30 | M10x40 | M12x50 | M12x80 | M16x65 | M16x80 | M20x80 |
|---|---|---|---|---|---|---|---|---|---|---|---|---|
| Depth of drill hole | $h_0$ = | [mm] | 30 | 30 | 40 | 30 | 40 | 50 | 80 | 65 | 80 | 80 |
| Drill hole diameter | $d_0$ = | [mm] | 8 | 10 | 10 | 12 | 12 | 15 | 15 | 20 | 20 | 25 |
| Cutting diameter of drill bit | $d_{cut} \leq$ | [mm] | 8,45 | 10,45 | 10,45 | 12,5 | 12,5 | 15,5 | 15,5 | 20,55 | 20,55 | 25,55 |
| Max. installation torque [1)] | $T_{inst} \leq$ | [Nm] | 4 | 8 | 8 | 15 | 15 | 35 | 35 | 60 | 60 | 120 |
| Diameter of clearance hole in the fixture | $d_f \leq$ | [mm] | 7 | 9 | 9 | 12 | 12 | 14 | 14 | 18 | 18 | 22 |
| Thread length | $L_{th}$ | [mm] | 13 | 13 | 20 | 12 | 15 | 18 | 45 | 23 | 38 | 34 |
| Minimum screw-in depth | $L_{sdmin}$ | [mm] | 7 | 9 | 9 | 10 | 11 | 13 | 13 | 18 | 18 | 22 |
| **Steel, zinc plated** | | | | | | | | | | | | |
| Minimum thickness of member | $h_{min}$ | [mm] | 100 | 100 | 100 | 120 | 120 | 130 | 130 | 160 | 160 | 200 |
| Minimum spacing | $s_{min}$ | [mm] | 55 | 60 | 80 | 100 | 100 | 120 | 120 | 150 | 150 | 160 |
| Minimum edge distance | $c_{min}$ | [mm] | 95 | 95 | 95 | 115 | 135 | 165 | 165 | 200 | 200 | 260 |
| **Stainless steel A4, HCR** | | | | | | | | | | | | |
| Minimum thickness of member | $h_{min}$ | [mm] | 100 | 100 | 100 | - | 130 | 140 | 140 | 160 | 160 | 250 |
| Minimum spacing | $s_{min}$ | [mm] | 50 | 60 | 80 | - | 100 | 120 | 120 | 150 | 150 | 160 |
| Minimum edge distance | $c_{min}$ | [mm] | 80 | 95 | 95 | - | 135 | 165 | 165 | 200 | 200 | 260 |

[1)] If the screw or threaded rod is otherwise secured against unscrewing, the torque can be omitted

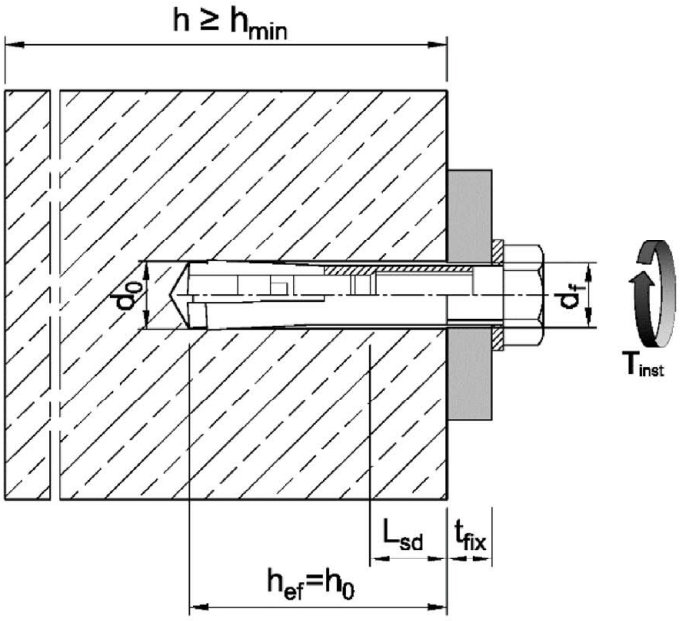


**SIKLA Drop-in Anchor AN / AN ES**

**Intended use**
Installation parameters

**Annex B2**

## Installation instructions

| | | |
|---|---|---|
| 1 | 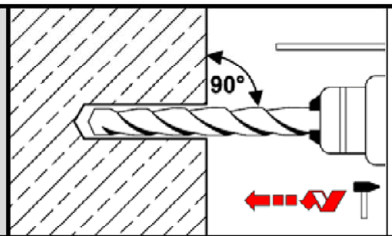 | Drill hole perpendicular to concrete surface.<br>Using vacuum drill bit proceed with step 3. |
| 2 | 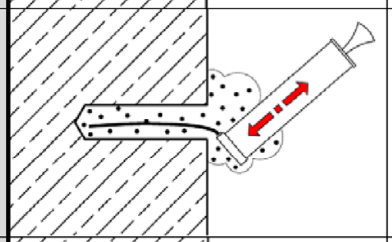 | Blow out dust. Alternatively, vacuum clean down to the bottom of the hole. |
| 3 | 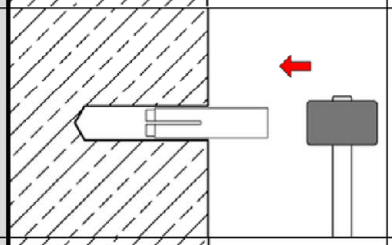 | Drive in anchor. |
| 4 | 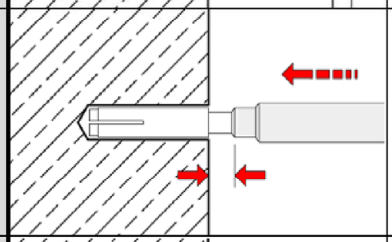 | Drive in cone by using setting tool. |
| 5 | 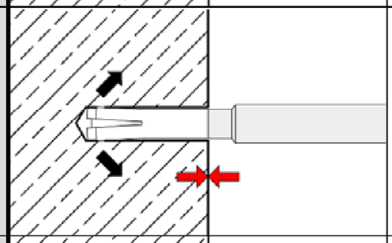 | Shoulder of setting tool must fit on anchor rim. |
| 6 | 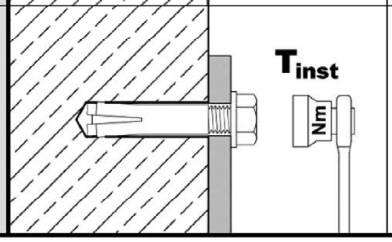 | Turn in screw or threaded rod with nut, observe minimum screw-in depth (see Annex B2).<br>Apply installation torque $T_{inst}$. |

**SIKLA Drop-in Anchor AN / AN ES**

**Intended use**
Installation instructions

**Annex B3**

## **Table C1:** Characteristic values for **tension loads, zinc plated steel**

| **Anchor size** | | | | | **M6x30** | **M8x30** | **M8x40** | **M10x30** | **M10x40** | **M12x50** | **M12x80** | **M16x65 M16x80** | **M20x80** |
|---|---|---|---|---|---|---|---|---|---|---|---|---|---|
| Installation factor | | | $\gamma_{inst}$ | [-] | 1,2 | | | | | | | | |
| **Steel failure** | | | | | | | | | | | | | |
| Characteristic resistance | property class | 4.6 | $N_{Rk,s}$ | [kN] | 8,0 | 14,6 | | 23,2 | | 33,7 | | 62,8 | 98,0 |
| | | 4.8 | | | 8,0 | 14,6 | | 18,0 | 20,2 | 33,7 | | 62,8 | 98,0 |
| | | 5.6 | | | 10,0 | 18,3 | | 18,0 | 20,2 | 42,1 | | 78,3 | 122,4 |
| | | 5.8 | | | 10,0 | 17,6 | 18,3 | 18,0 | 20,2 | 40,2 | 42,1 | 67,1 | 106,4 |
| | | 8.8 | | | 15,0 | 17,6 | 19,9 | 18,0 | 20,2 | 40,2 | 43,0 | 67,1 | 106,4 |
| Partial factor | property class | 4.6 | $\gamma_{Ms}$ [1)] | [-] | 2,0 | | | | | | | | |
| | | 5.6 | | | 2,0 | | | 1,5 | | 2,0 | | | |
| | | 4.8 | | | 1,5 | | | | | | | 1,6 | |
| | | 5.8 | | | | | | | | | | | |
| | | 8.8 | | | | | | | | | | | |
| **Pull-out failure** | | | | | | | | | | | | | |
| Characteristic resistance in concrete C20/25 | | | $N_{Rk,p}$ | [kN] | 8,1 | 8,1 | 9,0 | 8,1 | 12,4 | 17,4 | 17,4 | 25,8 | 35,2 |
| Increasing factor $N_{Rk,p} = \psi_c \cdot N_{Rk,p}$ (C20/25) | | | $\psi_C$ | [-] | $\left(\frac{f_{ck}}{20}\right)^{0,5}$ | | $\left(\frac{f_{ck}}{20}\right)^{0,3}$ | $\left(\frac{f_{ck}}{20}\right)^{0,5}$ | | | | | |
| **Splitting** | | | | | | | | | | | | | |
| Characteristic resistance in concrete C20/25 | | | $N^0_{Rk,sp}$ | [kN] | min ( $N_{Rk,p}$ ; $N^0_{Rk,c}$ ) | | | | | | | | |
| Characteristic edge distance | | | $c_{cr,sp}$ | [mm] | 95 | 95 | 95 | 115 | 135 | 165 | | 200 | 260 |
| Characteristic spacing | | | $s_{cr,sp}$ | [mm] | 2 · $c_{cr,sp}$ | | | | | | | | |
| **Concrete cone failure** | | | | | | | | | | | | | |
| Effective anchorage depth | | | $h_{ef}$ | [mm] | 30 | 30 | 40 | 30 | 40 | 50 | 80 | 65<br>80 [2)] | 80 |
| Characteristic edge distance | | | $c_{cr,N}$ | [mm] | 1,5 $h_{ef}$ | | | | | | | | |
| Characteristic spacing | | | $s_{cr,N}$ | [mm] | 2 · $c_{cr,N}$ | | | | | | | | |
| Factor | uncracked concrete | | $k_{ucr,N}$ | [-] | 11,0 | | | | | | | | |
| | cracked concrete | | $k_{cr,N}$ | [-] | No performance assessed | | | | | | | | |

[1)] In absence of other national regulations
[2)] For M16x80

**SIKLA Drop-in Anchor AN / AN ES**

**Performance**
Characteristic values for **tension loads, zinc plated steel**

**Annex C1**

## **Table C2:** Characteristic values for **tension loads, stainless steel A4, HCR**

| Anchor size | | | M6x30 | M8x30 | M8x40 | M10x40 | M12x50<br>M12x80 | M16x65<br>M16x80 | M20x80 |
|---|---|---|---|---|---|---|---|---|---|
| Installation factor | $\gamma_{inst}$ | [-] | 1,0 | | | | | | |
| **Steel failure** | | | | | | | | | |
| Characteristic resistance (property class 70) | $N_{Rk,s}$ | [kN] | 14,1 | 23,3 | | 29,4 | 50,2 | 83,8 | 133,0 |
| Characteristic resistance (property class 80) | $N_{Rk,s}$ | [kN] | 17,5 | 23,3 | | 29,4 | 50,2 | 83,8 | 133,0 |
| Partial factor | $\gamma_{Ms}$ [1)] | [-] | 1,87 | | | | | | |
| **Pull-out failure** | | | | | | | | | |
| Characteristic resistance in concrete C20/25 | $N_{Rk,p}$ | [kN] | 8,1 | 8,1 | 11,0 | 12,4 | 17,4 | 25,8 | 35,2 |
| Increasing factor | $\psi_c$ | [-] | $\left(\frac{f_{ck}}{20}\right)^{0,5}$ | | $\left(\frac{f_{ck}}{20}\right)^{0,3}$ | $\left(\frac{f_{ck}}{20}\right)^{0,5}$ | | | |
| **Splitting failure** | | | | | | | | | |
| Characteristic resistance in concrete C20/25 | $N^0_{Rk,sp}$ | [kN] | min ($N_{Rk,p}$ ; $N^0_{Rk,c}$) | | | | | | |
| Edge distance | $c_{cr,sp}$ | [mm] | 80 | 95 | 95 | 135 | 165 | 200 | 260 |
| Spacing | $s_{cr,sp}$ | [mm] | $2 \cdot c_{cr,sp}$ | | | | | | |
| **Concrete cone failure** | | | | | | | | | |
| Effective anchorage depth | $h_{ef}$ | [mm] | 30 | 30 | 40 | 40 | 50<br>80 [2)] | 65<br>80 [2)] | 80 |
| Edge distance | $c_{cr,N}$ | [mm] | 1,5 $h_{ef}$ | | | | | | |
| Spacing | $s_{cr,N}$ | [mm] | $2 \cdot c_{cr,N}$ | | | | | | |
| Factor – uncracked concrete | $k_{ucr,N}$ | [-] | 11,0 | | | | | | |
| Factor – cracked concrete | $k_{cr,N}$ | [-] | No performance assessed | | | | | | |

[1)] In absence of other national regulations
[2)] For M12x80 and M16x80

**SIKLA Drop-in Anchor AN / AN ES**

**Performance**
Characteristic values for **tension loads, stainless steel A4, HCR**

**Annex C2**

## **Table C3:** Characteristic values for **shear loads, zinc plated steel**

| **Anchor size** | | | | **M6x30** | **M8x30** | **M8x40** | **M10x30** | **M10x40** | **M12x50** | **M12x80** | **M16x65 M16x80** | **M20x80** |
|---|---|---|---|---|---|---|---|---|---|---|---|---|
| **Steel failure without lever arm** | | | | | | | | | | | | |
| Characteristic resistance | property class 4.6 | $V^0_{Rk,s}$ | [kN] | 4,0 | 7,3 | | 11,6 | 9,6 | 16,8 | | 31,3 | 49,0 |
| | 4.8 | | | 4,0 | 7,3 | | 10,1 | 10,1 | 16,9 | | 31,3 | 49,0 |
| | 5.6 | | | 5,0 | 9,1 | | 10,1 | 9,6 | 21,1 | | 39,2 | 61,2 |
| | 5.8 | | | 5,0 | 6,9 | | 10,1 | 7,2 | 19,4 | 21,1 | 33,5 | 53,2 |
| | 8.8 | | | 5,0 | 6,9 | | 10,1 | 7,2 | 19,4 | 21,5 | 33,5 | 53,2 |
| Partial factor | property class 4.6 | $\gamma_{Ms}$ [1)] | [-] | 1,67 | | | | | | | | |
| | 5.6 | | | 1,67 | | | 1,25 | 1,67 | | | | |
| | 4.8, 5.8, 8.8 | | | 1,25 | | | | | | | 1,33 | |
| Duktilitätsfaktor | | $k_7$ | [-] | 1,0 | | | | | | | | |
| **Steel failure with lever arm** | | | | | | | | | | | | |
| Characteristic bending resistance | property class 4.6, 4.8 | $M^0_{Rk,s}$ | [Nm] | 6,1 | 15 | | 30 | | 52 | | 133 | 259 |
| | 5.6, 5.8 | | | 7,6 | 19 | | 37 | | 65 | | 166 | 324 |
| | 8.8 | | | 12 | 30 | | 59 | 60 | 105 | | 266 | 519 |
| Partial factor | property class 4.6, 5.6 | $\gamma_{Ms}$ [1)] | [-] | 1,67 | | | | | | | | |
| | 4.8, 5.8, 8.8 | | | 1,25 | | | | | | | | |
| Factor of ductility | | $k_7$ | [-] | 1,0 | | | | | | | | |
| **Concrete pry-out failure** | | | | | | | | | | | | |
| Pry-out factor | | $k_8$ | [-] | 1,0 | | | | | 1,5 | 2,0 | | |
| **Concrete edge failure** | | | | | | | | | | | | |
| Effective length of fastener in shear loading | | $l_f$ | [mm] | 30 | 30 | 40 | 30 | 40 | 50 | 80 | 65<br>80 [2)] | 80 |
| Outside diameter of fastener | | $d_{nom}$ | [mm] | 8 | 10 | | 12 | | 15 | | 20 | 25 |

[1)] In absence of other national regulations
[2)] For M16x80

**SIKLA Drop-in Anchor AN / AN ES**

**Performance**
Characteristic values for **shear loads, zinc plated steel**

**Annex C3**

**Table C4:** Characteristic values for **shear loads, stainless steel A4, HCR**

| **Anchor size** | | | **M6x30** | **M8x30** | **M8x40** | **M10x40** | **M12x50** | **M12x80** | **M16x65** | **M16x80** | **M20x80** |
|---|---|---|---|---|---|---|---|---|---|---|---|
| **Steel failure without lever arm** | | | | | | | | | | | |
| Characteristic resistance (property class 70) | $V^0_{Rk,s}$ | [kN] | 7,0 | 10,6 | | 13,4 | 25,1 | | 41,9 | | 66,5 |
| Characteristic resistance (property class 80) | $V^0_{Rk,s}$ | [kN] | 8,7 | 10,6 | | 13,4 | 25,1 | | 41,9 | | 66,5 |
| Partial factor | $\gamma_{Ms}$ 1) | [-] | 1,56 | | | | | | | | |
| Factor of ductility | $k_7$ | [-] | 1,0 | | | | | | | | |
| **Steel failure with lever arm** | | | | | | | | | | | |
| Characteristic bending resistance (property class 70) | $M^0_{Rk,s}$ | [Nm] | 11 | 26 | | 52 | 92 | | 233 | | 454 |
| Partial factor | $\gamma_{Ms}$ 1) | [-] | 1,56 | | | | | | | | |
| Characteristic bending resistance (property class 80) | $M^0_{Rk,s}$ | [Nm] | 12 | 30 | | 60 | 105 | | 266 | | 519 |
| Partial factor | $\gamma_{Ms}$ 1) | [-] | 1,33 | | | | | | | | |
| Factor of ductility | $k_7$ | [-] | 1,0 | | | | | | | | |
| **Concrete pry-out failure** | | | | | | | | | | | |
| Pry-out factor | $k_8$ | [-] | 1,0 | 1,7 | | | | 2,0 | | | |
| **Concrete edge failure** | | | | | | | | | | | |
| Effective length of fastener in shear loading | $l_f$ | [mm] | 30 | 30 | 40 | 40 | 50 | 80 | 65 | 80 | 80 |
| Outside diameter of fastener | $d_{nom}$ | [mm] | 8 | 10 | | 12 | 15 | | 20 | | 25 |

1) In absence of other national regulations

**SIKLA Drop-in Anchor AN / AN ES**

**Performance**
Characteristic values for **shear loads, stainless steel A4, HCR**

**Annex C4**

## Table C5: Displacements under tension loads

| Anchor size | | | M6x30 | M8x30 | M8x40 | M10x30 | M10x40 | M12x50 M12x80 | M16x65 M16x80 | M20x80 |
|---|---|---|---|---|---|---|---|---|---|---|
| **Steel, zinc plated** | | | | | | | | | | |
| Tension load in uncracked concrete | N | [kN] | 3 | 3 | 3,6 | 3,3 | 4,8 | 6,4 | 10 | 14,8 |
| Displacements | $\delta_{N0}$ | [mm] | 0,24 | | | | | | | |
| | $\delta_{N\infty}$ | [mm] | 0,36 | | | | | | | |
| **Stainless steel A4 / HCR** | | | | | | | | | | |
| Tension load in uncracked concrete | N | [kN] | 4 | 4 | 4,3 | - [1)] | 6,1 | 8,5 | 12,6 | 17,2 |
| Displacements | $\delta_{N0}$ | [mm] | 0,12 | | | | | | | |
| | $\delta_{N\infty}$ | [mm] | 0,24 | | | | | | | |

[1)] Anchor version is not part of the ETA

## Table C6: Displacements under shear loads

| Anchor size | | | M6x30 | M8x30 | M8x40 | M10x30 | M10x40 | M12x50 M12x80 | M16x65 M16x80 | M20x80 |
|---|---|---|---|---|---|---|---|---|---|---|
| **Steel, zinc plated** | | | | | | | | | | |
| Shear load in uncracked concrete | V | [kN] | 2 | 4 | 4 | 5,7 | 4,0 | 11,3 | 18,8 | 32,2 |
| Displacements | $\delta_{V0}$ | [mm] | 0,9 | 0,9 | 1,0 | 1,5 | 0,6 | 1,2 | 1,2 | 1,6 |
| | $\delta_{V\infty}$ | [mm] | 1,3 | 1,3 | 1,5 | 2,3 | 0,9 | 1,9 | 1,9 | 2,4 |
| **Stainless steel A4 / HCR** | | | | | | | | | | |
| Shear load in uncracked concrete | V | [kN] | 3,5 | 5,2 | 5,2 | - [1)] | 6,5 | 11,5 | 19,2 | 30,4 |
| Displacements | $\delta_{V0}$ | [mm] | 1,9 | 1,1 | 0,7 | - [1)] | 1,0 | 1,7 | 2,4 | 2,6 |
| | $\delta_{V\infty}$ | [mm] | 2,8 | 1,6 | 1,0 | - [1)] | 1,5 | 2,6 | 3,6 | 3,8 |

[1)] Anchor version is not part of the ETA

**SIKLA Drop-in Anchor AN / AN ES**

**Performance**
Displacements

**Annex C5**